Introducing your Meridian M3901 Telephone

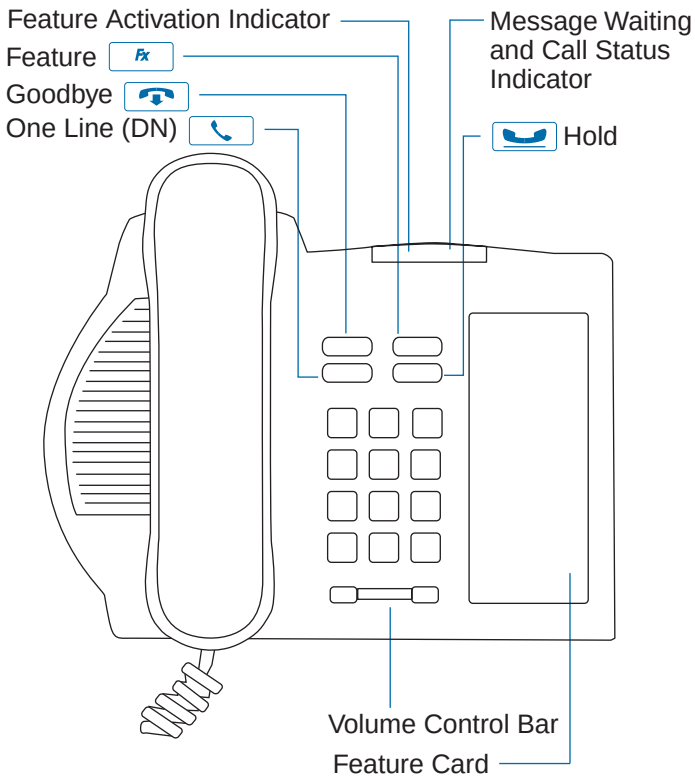

Features Assigned to Your Telephone
1
2
3
4
5

Flexible Feature Codes (FFCs)			
	Call Forward All Calls Activate		Call Forward All Calls Deactivate
	Park Call		Park Call Access
	Pickup Ringing Number		Pickup Group
	Pickup Directory Number		Group Call
	Electronic Lock Activate		Electronic Lock Deactivate
	Make Set Busy Activate		Make Set Busy Deactivate
	Malicious Call Trace		Override
	Ring Again Activate		Ring Again Deactivate
	Speed Call User		System Speed Call User

P0942072 Standard Issue 1.00

NORTEL NETWORKS

Meridian Digital Telephones

M3901 Quick Reference Card

Feature Operation

Note 1: Features must be enabled by your network administrator. You only have access to the five features or Auto Dial positions that appear on the feature card of your telephone.

Note 2: When activating features or programming Auto Dial Keys, you have 30 seconds to complete the key sequence or the process ends.

Auto Dial					
store		Fx	A		
		B	Fx	A	
use		Fx	A		
Hold					
place a call on hold					
return to a held call					
Transfer					
transfer a call	Fx	A	C		
		Fx	A		
Conference					
create a conference	Fx	A			
		D	Fx	A	
correct an error or receive busy tone					
Last Number Redial					
Ring Again					
activate	Fx	A			
when notified		Fx	A		
cancel	Fx	A			
Speed Call					
store	Fx	A			
		E	Fx	A	
use		Fx	A	F	
Volume Control					
ringing	(while the telephone is ringing)				
handset	(while on a telephone call)				
Deactivate all active features	Fx	#			

For information on using your M3901 telephone when connected to a Meridian SL-100 system, please consult the *Meridian Digital Telephones M3901, M3902, M3903, M3904 User Guide.*

Explanations

Legend	
	Lift the handset, or press to receive dialtone.
	Replace handset, or press to end the call.
	Dial a number.
	Press the Line Key.
	Press the Hold Key.
	Press the Goodbye Key.
Fx	Press the Feature Key.
	Press the left side of the Volume Control Bar to lower the volume. Press the right side to increase the volume.

Message Waiting and Call Status Indicator	
On (steady light)	A message is waiting.
Wink (slow flash)	An incoming call is ringing.
Flash	A call is on hold.
Off	There is no message waiting, no call on hold, and no incoming call.

Feature Activation Indicator	
On (steady light)	One or more features are active.
Flash	A feature is being programmed and input is required.

Remarks	
A	Press the Dial Pad Key (1 - 5) that corresponds to Auto Dial or Feature number on your feature card
B	Use the Dial Pad to enter the number (maximum of 31 characters). Be sure to include any required access codes.
C	Dial the number to which you want to Transfer the call.
D	Dial the number of the party that you want to add to the Conference. You may repeat this process to add up to six people to a Conference Call.
E	Dial the 1 to 3 digit Speed Call code (ask your network administrator if you are unsure about the number of digits used on your network) followed by the telephone number that the code represents (maximum of 31 digits). Be sure to include any required access codes.
F	Dial the 1 to 3 digit Speed Call code.

For additional information on the operation of your telephone, please consult the *Meridian Digital Telephones M3901, M3902, M3903, M3904 User Guide.*